1-800-BOLLARDS

The Bollard Experts

REVISIONS			
LTR	DESCRIPTION	DATE	APPVD

COMMENTS

SPECIFICATIONS
HEIGHT: 36"
DIAMETER: 4.50"
WALL THICKNESS: 0.120"

- ☐ 4" BOLLARD COVER (3" NOMINAL BOLLARD SIZE)
  - ☐ CSS4010 SCHED 10 STAINLESS STEEL COVER
- ☐ STAINLESS STEEL BOLLARD COVER FINISH
  - ☐ POLISHED #4
- ☐ SELECT DESIRED STAINLESS STEEL BOLLARD MATERIAL:
  - ☐ TYPE 304
  - ☐ TYPE 316
- ☐ SELECT DESIRED BOLLARD CAP STYLE:
  - ☐ DOME
  - ☐ FLAT
  - ☐ REVEAL
  - ☐ SLOPED
- ☐ COVER HEIGHT SELECTION FROM:
  - ☐ BASE OF BOLLARD
  - ☐ TOP OF BOLLARD _____INCHES

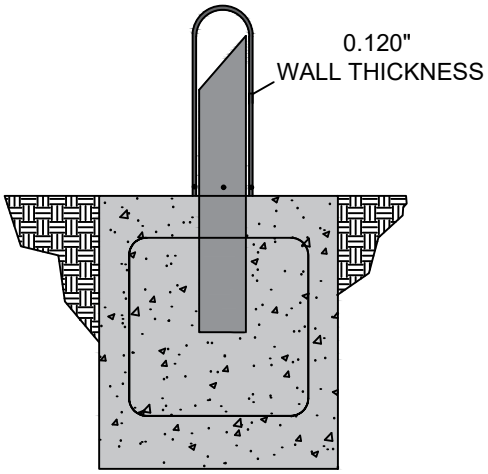

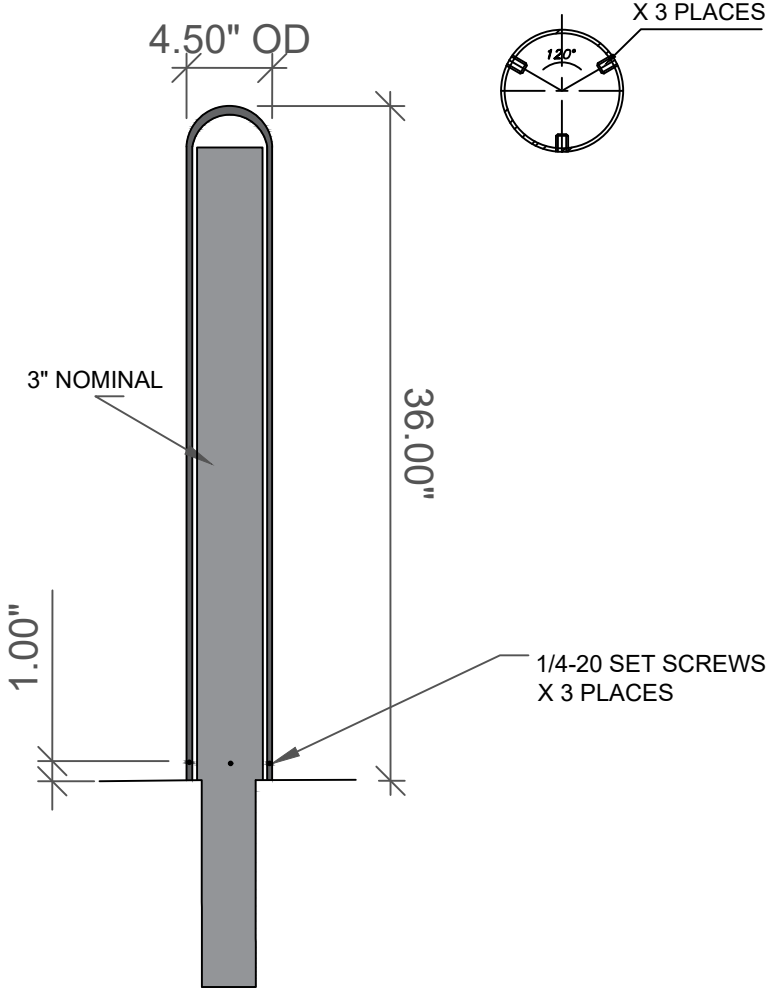

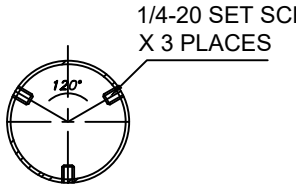

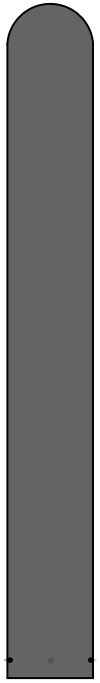

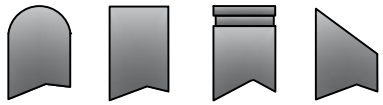

NOTES:
1. INSTALLATION TO BE COMPLETED IN ACCORDANCE WITH MANUFACTURER'S SPECIFICATIONS.
2. DO NOT SCALE DRAWING.
3. THIS DRAWING IS INTENDED FOR USE BY ARCHITECTS, ENGINEERS, CONTRACTORS, CONSULTANTS AND DESIGN PROFESSIONALS FOR PLANNING PURPOSES ONLY. THIS DRAWING
4. ALL INFORMATION CONTAINED HEREIN WAS CURRENT AT THE TIME OF DEVELOPMENT BUT MUST BE REVIEWED AND APPROVED BY THE PRODUCT MANUFACTURER TO BE CONSIDERED ACCURATE.

APPLICATION	
NEXT ASSY	USED ON

SERIES NUMBER:	C4000	CAGE CODE: C4 / SIZE: 4	DRAWING NUMBER: C40
PRODUCT FAMILY:	FIXED BOLLARD	DRAWN BY: AJA	DRAWING REV:
PRODUCT CLASS:	STANDARD OR CUSTOMER DEFINED	CHECKED BY:	SHEET: 1 OF 1
PRODUCT LINE:	BOLLARD	APPROVED BY:	RELEASE DATE: 1-3-2023
PRODUCT SUB LINE:	COVER		

1-800-BOLLARDS, Inc.
10 Hughes Suite A105
Irvine, CA 92618
PHONE: 1-800-BOLLARDS
WEB: WWW.1800BOLLARDS.COM
EMAIL: INFO@1800BOLLARDS.COM

TITLE: BOLLARD, COVER